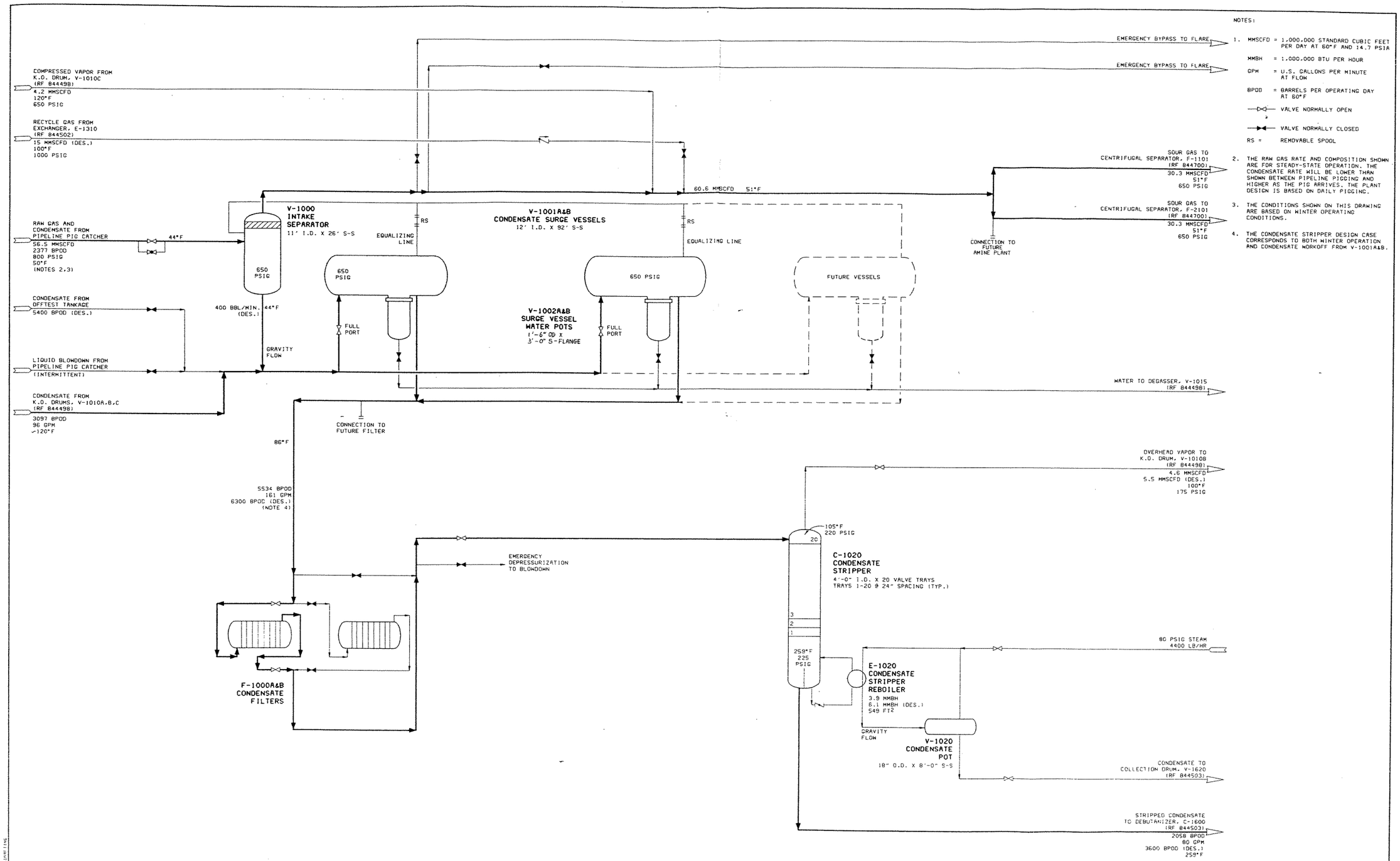

NOTES:

1. MMSCFD = 1,000,000 STANDARD CUBIC FEET PER DAY AT 60°F AND 14.7 PSIA
   MMBH = 1,000,000 BTU PER HOUR
   GPM = U.S. GALLONS PER MINUTE AT FLOW
   BPOD = BARRELS PER OPERATING DAY AT 60°F
   VALVE NORMALLY OPEN
   VALVE NORMALLY CLOSED
   RS = REMOVABLE SPOOL
2. THE RAW GAS RATE AND COMPOSITION SHOWN ARE FOR STEADY-STATE OPERATION. THE CONDENSATE RATE WILL BE LOWER THAN SHOWN BETWEEN PIPELINE PIGGING AND HIGHER AS THE PIG ARRIVES. THE PLANT DESIGN IS BASED ON DAILY PIGGING.
3. THE CONDITIONS SHOWN ON THIS DRAWING ARE BASED ON WINTER OPERATING CONDITIONS.
4. THE CONDENSATE STRIPPER DESIGN CASE CORRESPONDS TO BOTH WINTER OPERATION AND CONDENSATE WORKOFF FROM V-1001A&B.

CONFIDENTIAL
PROPERTY OF CHEVRON RESEARCH COMPANY. TO BE REPRODUCED, AND USED, ONLY IN ACCORDANCE WITH WRITTEN PERMISSION OF CHEVRON RESEARCH COMPANY

REFERENCE DRAWINGS:

RF 844700 - PROCESS FLOW DIAGRAM - DEA ABSORBER AND REGENERATOR
RF 844498 - PROCESS FLOW DIAGRAM - INTAKE COMPRESSION
RF 844502 - PROCESS FLOW DIAGRAM - SALES GAS COMPRESSION
RF 844503 - PROCESS FLOW DIAGRAM - FRACTIONATION

REVISION			
	SCALE NONE	DATE 10/16/84	
	DR AMF	CH	ENG. SRG
	APPR.		

CHEVRON RESEARCH COMPANY
PROCESS ENGINEERING DEPT.
PROCESS DESIGN DIVISION

SIMPLIFIED PROCESS FLOW DIAGRAM
INTAKE SEPARATION AND CONDENSATE STRIPPING
PLANTS 10A&B - GAS PROCESSING SECTION
GAVIOTA GAS PLANT

S.O. 30042 | RF 844497 | REVISION

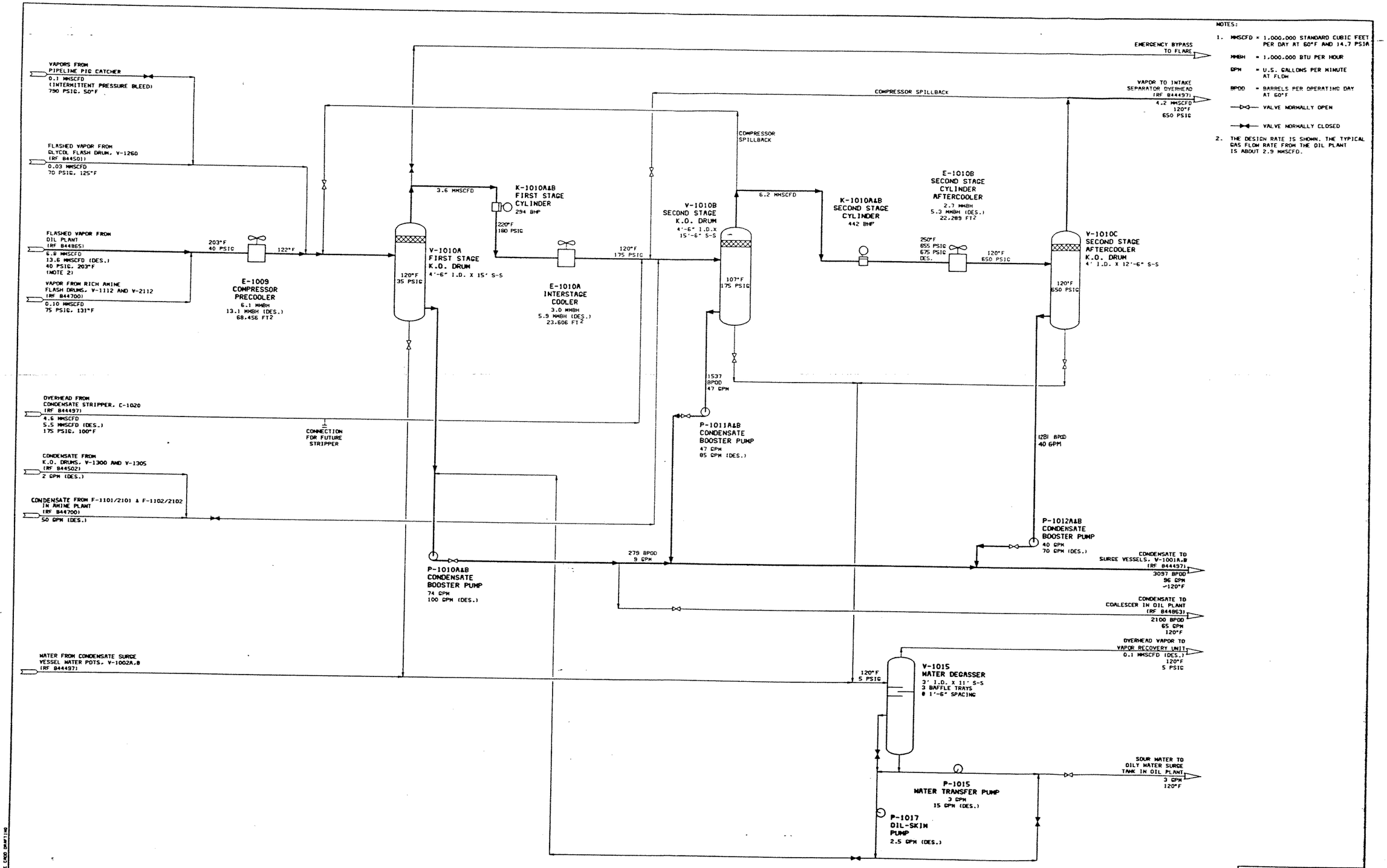

NOTES:

1. MMSCFD = 1,000,000 STANDARD CUBIC FEET PER DAY AT 60°F AND 14.7 PSIA
   MMBH = 1,000,000 BTU PER HOUR
   GPM = U.S. GALLONS PER MINUTE AT FLOW
   BPOD = BARRELS PER OPERATING DAY AT 60°F
   —▷◁— VALVE NORMALLY OPEN
   —▶◀— VALVE NORMALLY CLOSED
2. THE DESIGN RATE IS SHOWN. THE TYPICAL GAS FLOW RATE FROM THE OIL PLANT IS ABOUT 2.9 MMSCFD.

REFERENCE DRAWINGS:

RF 844863 - PROCESS FLOW DIAGRAM - CRUDE TREATING
RF 844700 - PROCESS FLOW DIAGRAM - DEA ABSORBER AND REGENERATOR
RF 844497 - PROCESS FLOW DIAGRAM - INTAKE SEPARATION AND CONDENSATE STRIPPING
RF 844501 - PROCESS FLOW DIAGRAM - ETHYLENE GLYCOL INJECTION SYSTEM
RF 844502 - PROCESS FLOW DIAGRAM - SALES GAS COMPRESSION

CONFIDENTIAL
PROPERTY OF CHEVRON RESEARCH COMPANY. TO BE REPRODUCED AND USED ONLY IN ACCORDANCE WITH WRITTEN PERMISSION OF CHEVRON RESEARCH COMPANY

REVISION			
	SCALE NONE	DATE 11/14/84	
	DR LHM	CH	ENG. SAC
	APPR.		

CHEVRON RESEARCH COMPANY
PROCESS ENGINEERING DEPT.
PROCESS DESIGN DIVISION

SIMPLIFIED PROCESS FLOW DIAGRAM
INTAKE COMPRESSION
PLANT 10B - GAS PROCESSING SECTION
GAVIOTA GAS PLANT

S.O. 30042 | RF 844498 | REVISION