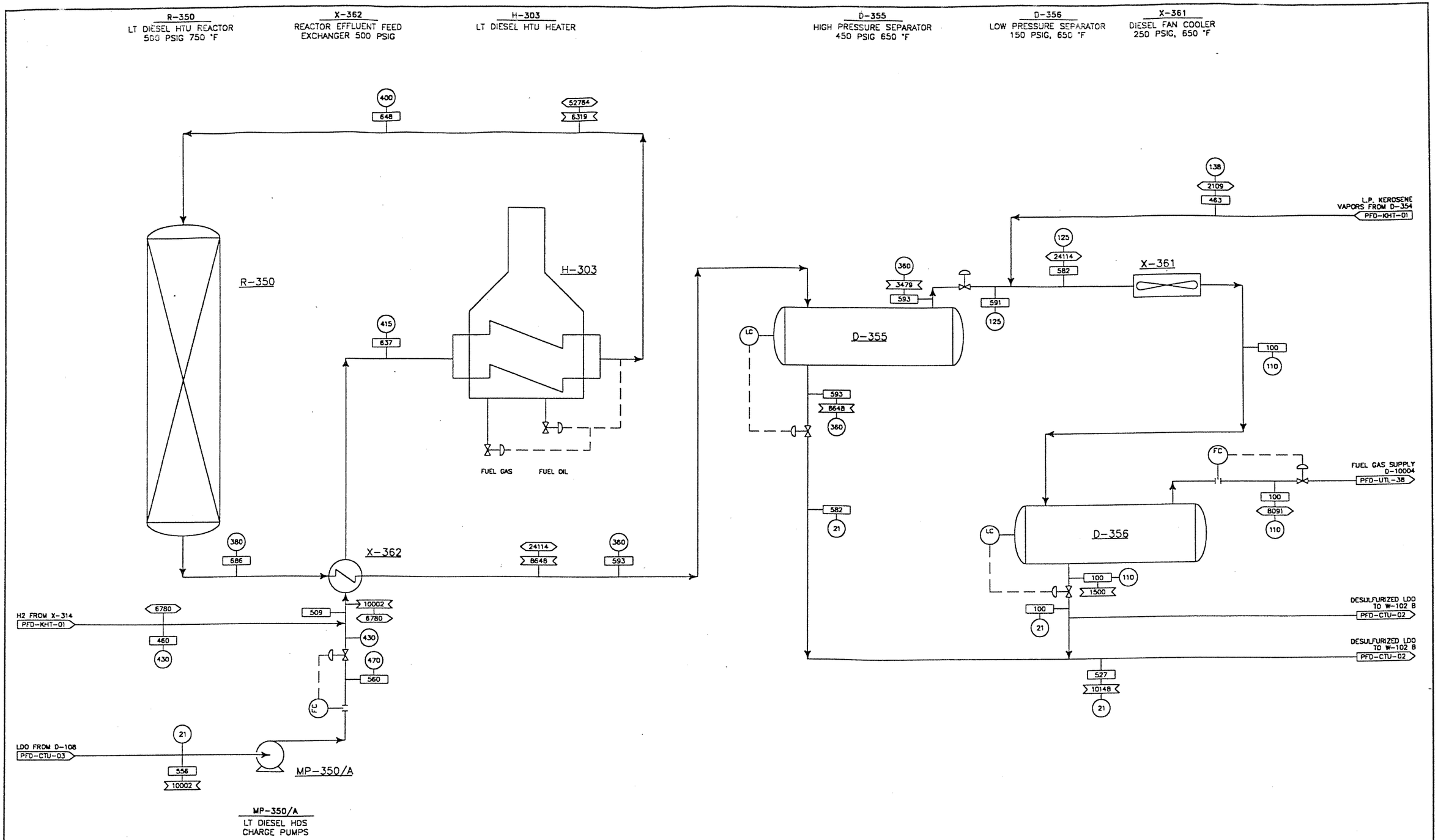


MP-350/A
LT DIESEL HDS
CHARGE PUMPS

REFINERIA PANAMA S. A.
BAHIA LAS MINAS, COLON, PANAMA

NOTICE
THIS DRAWING AND THE INFORMATION HEREON CONTAINED ARE THE PROPERTY OF REFPAN WHICH HAS FURNISHED THEM IN CONFIDENCE UPON THE UNDERSTANDING AND CONDITION THAT ALL PERSONS, FIRMS OR CORPORATIONS RECEIVING SUCH DRAWING AND INFORMATION SHALL BY THE ACT OF RECEIVING THEM BE DEEMED TO HAVE AGREED: TO MAKE NO COPY, DUPLICATION, DISCLOSURE OR USE WHATSOEVER OF ALL OR ANY PART THEREOF EXCEPT AS EXPRESSLY AUTHORIZED IN WRITING BY REFPAN ; NOT TO GIVE, LEND OR OTHERWISE DISPOSE OF THIS DRAWING; AND TO RETURN THIS DRAWING PROMPTLY UPON REQUEST.

NOTES

LEGEND:

| NO. | DATE | REVISION | BY | ENGR. | CHK'D | APP'D |
|---|---|---|---|---|---|---|
| 0 | 9-30-97 | GENERAL REVISION | ROT | JMP | RCW | JBO |

PROCESS FLOW DIAGRAM
DIESEL HYDROTREATING UNIT

| | | | |
|---|---|---|---|
| DRAWN ROT | DATE 10-9-97 | PROJECT | REV. |
| PROC. ENG. JMP | DATE 9-30-97 | NO. | 0 |
| PROJ. ENG. RCW | DATE | DRAWING NO. PFD-DHT-01 | |
| PROJ. MGR. JBO | DATE | | |